b.o.b. Sistemi Idraulici S.p.A.

ITRunner®

AZIENDA CON SISTEMA
DI GESTIONE QUALITÀ
CERTIFICATO DA DNV
= ISO 9001 =

2 AXLES HOOKLIFT TRAILER ITR « 18.23 »
MECHANIC SUSPENSIONS ARTICULATED ARM

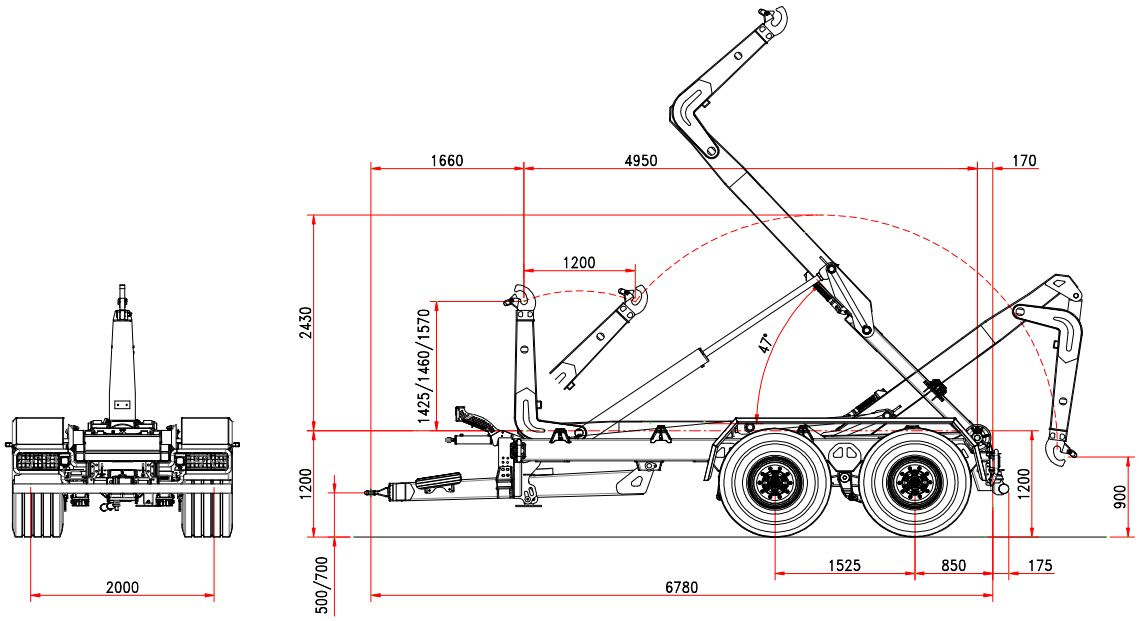

STANDARD FEATURES

CHASSIS

Frame section	250 x 100
Drawbar	silent blocks
Leaf spring suspension	Tandem 24 ton
Axles wheelbase	1.525 mm
Axles section	2 x 110
Axles	fixed + fixed
Track	2.000 mm
Brake drums	406 x 120
Braking system	hydraulic
Towing eye	turning
Support foot	Nr. 1 hydraulic
Wheel size	500/60-22,5
Chassis loading level	1.200 mm
Front stab. cylinder 3rd point	standard

WEIGHT AND DIMENSION

G.T.W.	23 ton
(*) Tare	5.100 kg
Dimensions min./max container	4.000/6.000 mm.
Max speed	40 Km/h

ARTICULATED ARM

Run	1.200 mm.
Hook level	1.425/1.460/1.570
Container ext./int. locking	hydraulic
Tipping angle	47°
Hoist start cylinder	standard
Max. tipping capacity	18 tons
Max. hosting capacity	18 tons

OLEO-DYNAMIC SYSTEM

Tractor hydraulics	2 controls double acting
Oil volume	46 lt
Hooklift filled:	
Cylinders oil operation demand:	
Tipping	11,4 l
Loading / unloading	12,7 l
Tipping / loading pressure	180 / 200 bat
3 sections electro-valves with control Bobeasy base	

Edit 06/2013

(*) The trailer tare is referred to the basic unit without options & accessories

The technical details shown in this sheet are indicative and can be changed by the builder without prior notice.

B.O.B. Sistemi Idraulici S.p.A. – Regione Oltre Rea, 32 – 12060 Monchiero (CN) – Italia
P. I.V.A. 00496180043 - Tel.: +39 (0173) 780002/3 – Fax: +39 (0173) 780004
Internet: www.bobspa.com - e-mail: info@bobitalev.com